Digital subsystem

AVR microcontroller

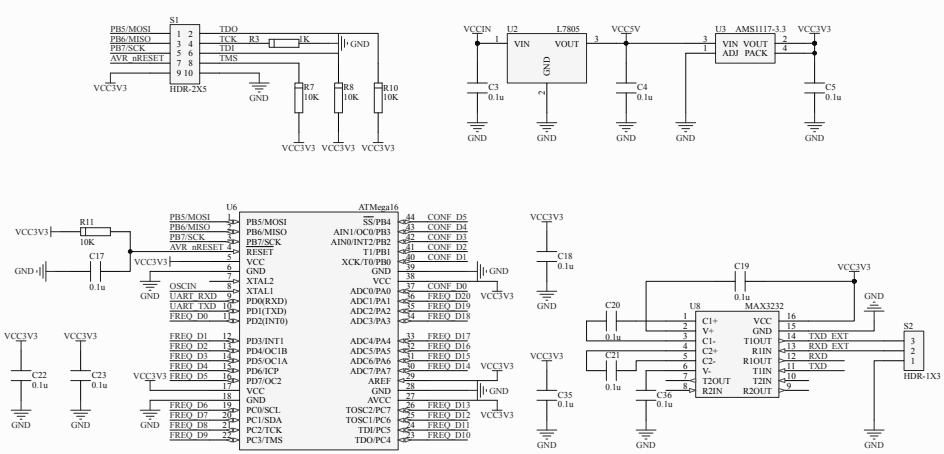

Analog subsystem

Main PWM

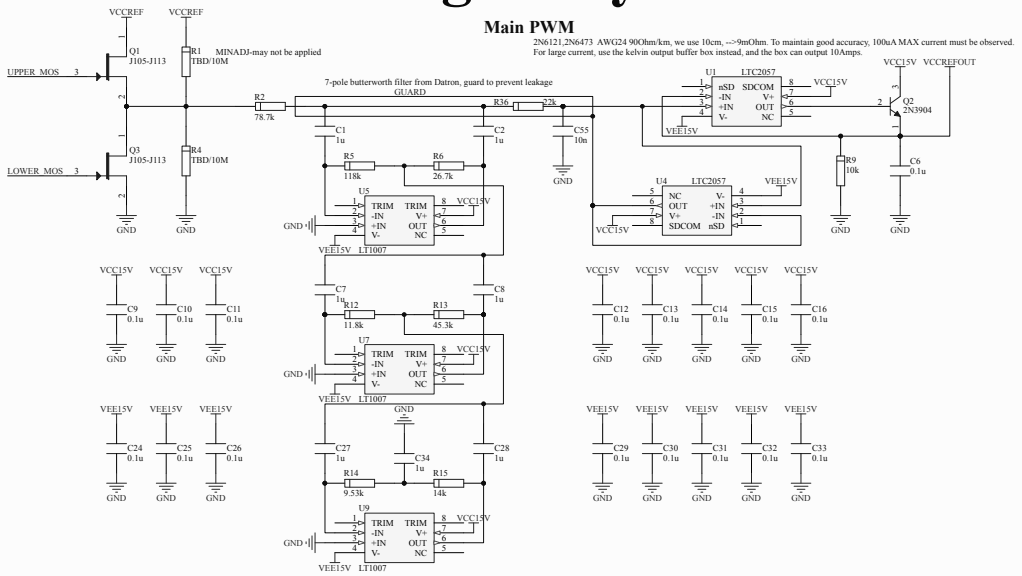

EPM240 CPLD

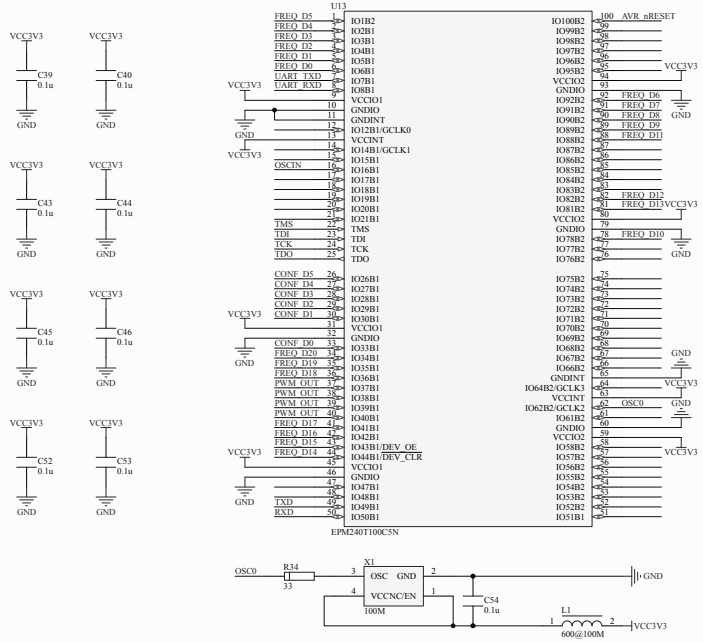

PWM driver/Reference buffering

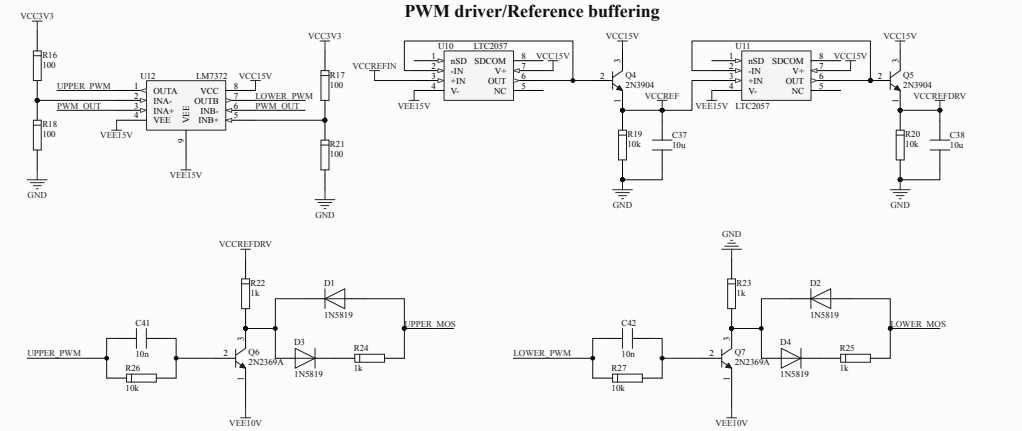

Power stage

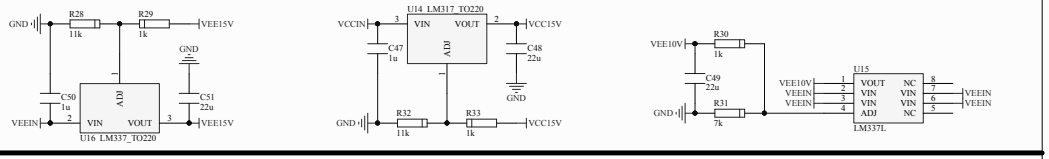

Connectors

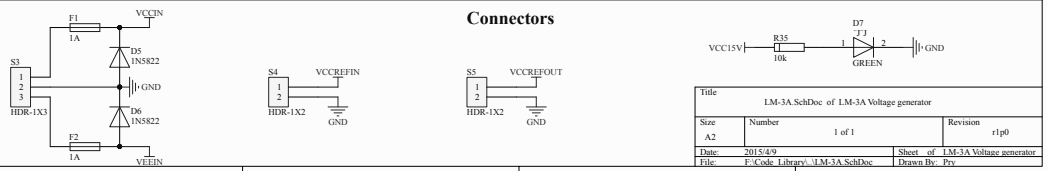

Title	LM-3A.SchDoc of LM-3A Voltage generator	
Size A2	Number 1 of 1	Revision r1p0
Date: 2015/4/9		Sheet of LM-3A Voltage generator
File:	F:\Code_Library\...\LM-3A.SchDoc	Drawn By: Pry