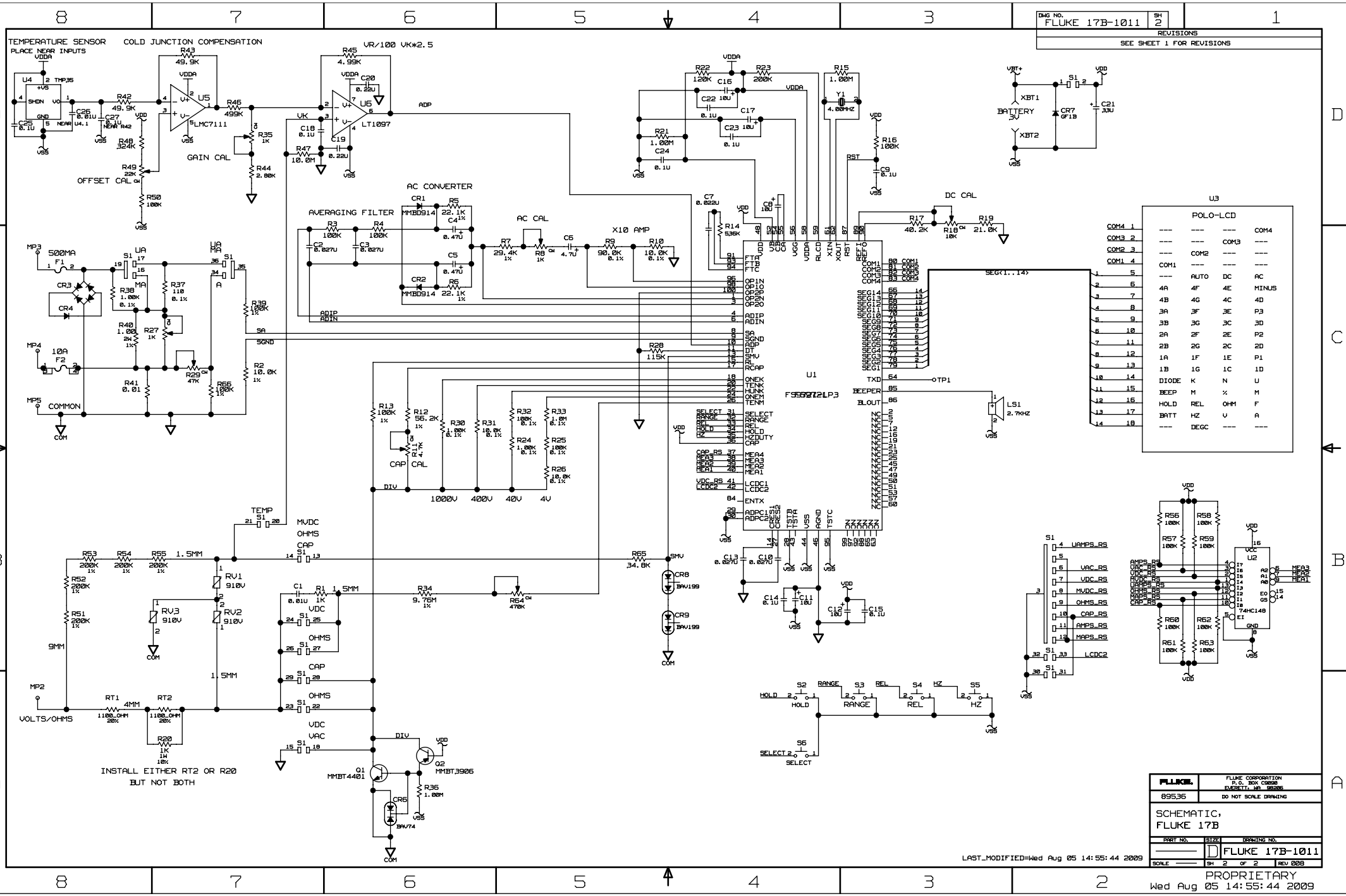
DWG NO. FLUKE 17B-1011 SH 2
REVISIONS
SEE SHEET 1 FOR REVISIONS
TEMPERATURE SENSOR
PLACE NEAR INPUTS
COLD JUNCTION COMPENSATION
VR/100 VK*2.5
GAIN CAL
OFFSET CAL
AC CONVERTER
AVERAGING FILTER
AC CAL
X10 AMP
DC CAL
BATTERY 3V
U3
POLO-LCD
U1
CAP CAL
1000V
400V
40V
4V
TEMP
MVDC
OHMS
CAP
VDC
VAC
VOLTS/OHMS
INSTALL EITHER RT2 OR R20
BUT NOT BOTH
U2
74HC148
HOLD
RANGE
REL
HZ
SELECT
LAST_MODIFIED=Wed Aug 05 14:55:44 2009
FLUKE CORPORATION
P.O. BOX C9090
EVERETT, WA 98206
89536
DO NOT SCALE DRAWING
SCHEMATIC,
FLUKE 17B
PART NO.
SIZE D
DRAWING NO. FLUKE 17B-1011
SCALE
SH 2 OF 2
REV 008
PROPRIETARY
Wed Aug 05 14:55:44 2009