TRIPLEX LCD

CALTEK™		
DRAWN BY: C.Y. NGAN	TITLE: VC300	SCALE:
CHECKED BY: P.Y. CHAN	NO.: FILE : CIR121.DWG	UNIT:
APPROVED BY:		REV: A
DATE: 13-4-1994	SHEET 1 OF 1	

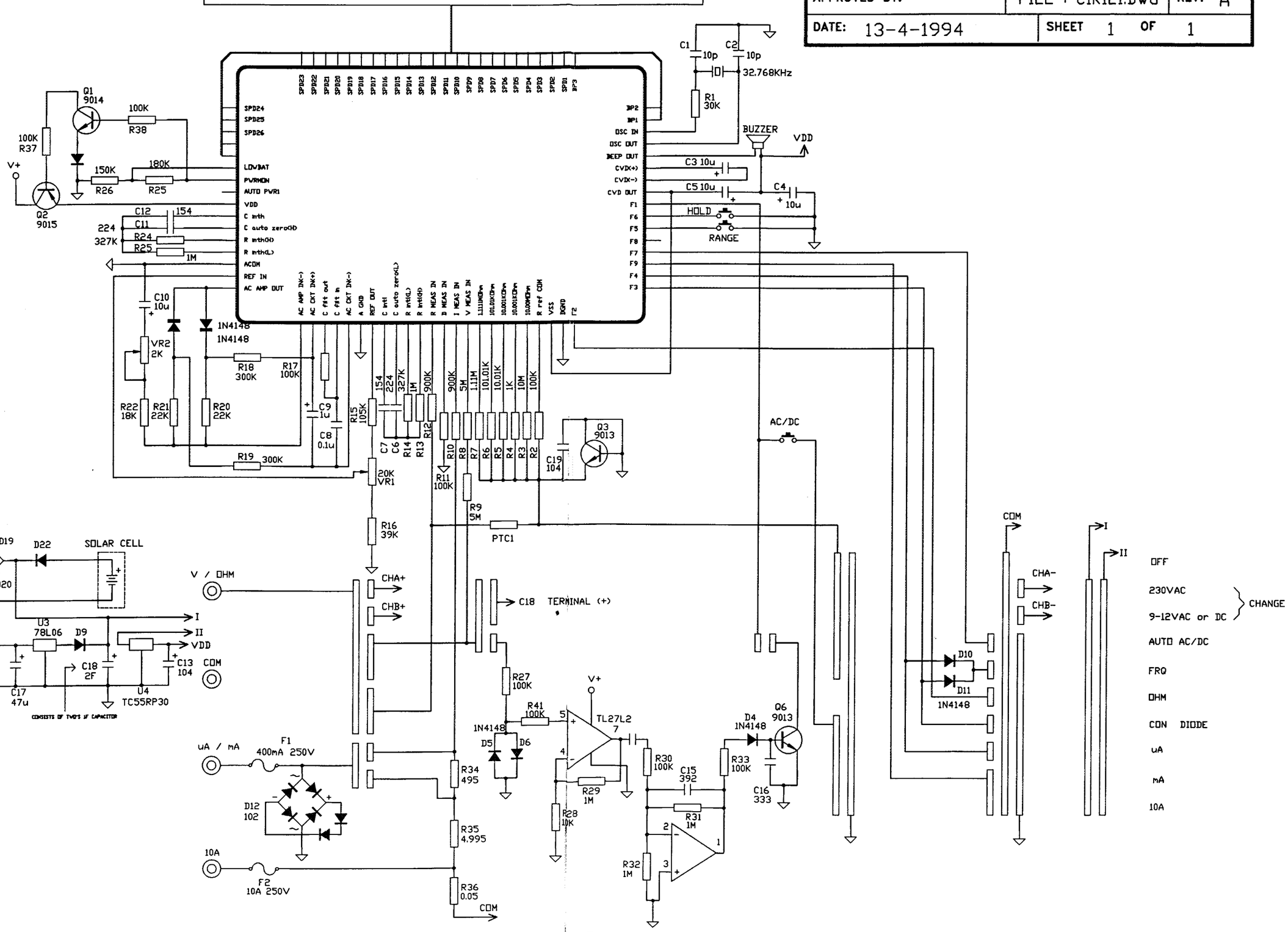

Green Meter II